深圳市晶彩科技有限公司

Shenzhen Jingcai Technology Co., Ltd

Product Specification

产品规格书

产品生产商：深圳市晶彩科技有限公司

产品名称　：3.97寸480*800点阵彩屏

规格型号 ：模组HD397057C33

部门确认：

研发	工程	品管	审核

印　　章：

日　　期：

客户回签：

采购	工程	品管	确认

印　　章：

日　　期：

Table of Contents

REVISION HISTORY ····· **3**

1. **GENERAL DESCRIPTION** ····· **4**

1.1 DESCRIPTION ····· 4

1.2 GENERAL INFORMATION ····· 4

2. **ABSOLUTE MAXIMUM RATING** ····· **5**

3. **ELECTRICAL CHARACTERISTICS** ····· **6**

3.1 LCM DC CHARACTERISTICS ····· 6

3.2 BACK-LIGHT UNIT CHARACTERISTICS ····· 6

4. **OPTICAL CHARACTERISTICS** ····· **7**

5. **MODULE OUTLINE DIMENSION** ····· **10**

6. **MODULE INTERFACE DESCRIPTION** ····· **11**

7. **REFERENCE APPLICATION CIRCUIT** ····· **12**

8. **DSI system interface** ····· **13**

9. **RELIABILITY TEST CONDITIONS** ····· **14**

10. **PACKING** ····· **14**

11. **INSPECTION CRITERION** ····· **15**

12. **GENERAL PRECAUTIONS** ····· **19**

The copyright belongs to APROSO Any unauthorized use is prohibited.

REVISION HISTORY

Rev	Description	Page	Date
1.0	Initial Release	All	2022-12-13

The copyright belongs to APROSO Any unauthorized use is prohibited.

1. GENERAL DESCRIPTION

1.1 DESCRIPTION

HD397057C33 is a transmissive type color active matrix INCELl liquid crystal display (LCD) that uses amorphous silicon INCELl as a switching device. This model is composed of a INCELl -LCD module (INCELl panel, driver IC and FPC), a back-light unit and. The resolution of 3.97" contains 480 RGB X800 pixels and can display up to 16.7m colors.

1.2 GENERAL INFORMATION

Items	Specification	Unit	Note
Drive element	a-Si TFT	-	-
LCM outline size	59.27 (H) x106.11 (V)	mm	
Active area	51.84 (H) x 86.40 (V)	mm	-
Number of pixels	480(H)X800(V)	pixels	-
Pixel arrangement	RGB stripe	-	-
Pixel Pitch	0.108 (H) * 0.108 (V)	um	-
Display color	16.7m color	color	-
Viewing direction	ALL	-	-
Controller / Driver	AXS15260D	-	-
Data interface	MIPI	-	
Backlight	10 White LEDs	-	
Weight	TBD	g	

The copyright belongs to APROSO Any unauthorized use is prohibited.

2. ABSOLUTE MAXIMUM RATING

(Ta=25±2°C, Vss=GND=0V)

Characteristics	Symbol	Min.	Typ	Max.	Unit	Notes
Supply Voltage	IOVCC	-0.3	-	4.6	V	
	VCI	-0.3	-	4.6	V	
TFT Gate On voltage	VGH	-0.3	-	26	V	
TFT Gate Off voltage	VGL	0.3	-	-16	V	
Backlight Forward Current	I_F	-		40	mA	
Operating Temperature	T_{OPR}	-20		+70	°C	(1), (3)
Storage Temperature	T_{STG}	-30		+80	°C	(2), (3)
Humidity	RH	-		90	%	Max. 60 °C

Notes:

(1) In case of below 0°C, the response time of liquid crystal (LC) becomes slower and the color of panel becomes darker than normal one. Level of retardation depends on temperature, because of the LC characteristics.

(2) If product is exposed to high temperatures for extended time, there is a possibility of the polarizer film damage which could degrade the optical characteristics.

(3) Permanent damage to the device may occur if maximum values are exceeded or reverse voltage is loaded.
Functional operation should be restricted to the conditions described under normal operating conditions.

The copyright belongs to APROSO Any unauthorized use is prohibited.

3. ELECTRICAL CHARACTERISTICS

3.1 LCM DC CHARACTERISTICS

(Ta=25±2°C)

Characteristics	Symbol	Min.	Typ.	Max.	Unit	Note
Power Supply Voltage 1	IOVCC	1.65	1.8	3.3	V	
Power Supply Voltage 2	VCI	2.5	2.8	3.3	V	
Power Supply Voltage 3	-	-	-	-	V	
Power Supply for MTP	VPP	-	-	-	V	
Current Consumption	I_{DD}	-	TBD	-	mA	Normal mode
	$I_{DD\text{-}SLEEP}$		TBD		uA	Sleep mode
Input voltage “L” Level	V_{IL}	-0.3	-	0.3IOVCC	V	IOVCC=1.65~3.3
Input voltage “H” Level	V_{IH}	0.7IOVCC	-	IOVCC	V	
Output voltage “L” Level	V_{oL}	IOL = +1.0mA	-	0.2IOVCC	V	I_{OL}=1mA
Output voltage “H” Level	V_{oH}	IOH = -1.0mA	-	IOVCC	V	I_{OH}=-1mA

3.2 BACK-LIGHT UNIT CHARACTERISTICS

The back-light system is an edge-lighting type with 4 white LEDs. The characteristics of the back-light are shown in the following tables.

(Ta=25±2°C)

Characteristics	Symbol	Condition	Min.	Type	Max.	Unit	Notes
Forward Voltage	Vf	I_L=40mA	-	15	-	V	-
Forward current	I_L		-	40	-	mA	-
Luminance	Lv	I_L=40mA	--	300	--	cd/m^2	-
LED life time	-	I_L=40mA	20,000	25,000	--	Hr	Note 1

Note:

(1) The “LED life time” is defined as the module brightness decrease to 50% of original brightness at I_L=20mA. The LED life time could be decreased if operating I_L is larger than 20mA.

Bcklight circuit diagram shown in below:

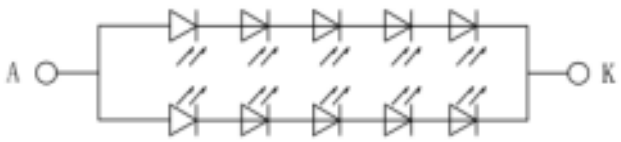

VF:15V IF:40MA

4. OPTICAL CHARACTERISTICS

The following items are measured under stable conditions. The optical characteristics should be measured in a dark room.
Measuring equipment: BM-5AS, BM-7, EZ-Contrast.

(Ta=25±2°C)

Parameter		Symbol	Condition	Min.	Typ.	Max.	Unit	Note
Contrast Ratio (Center point)		C/R	-	450	500	-	cd/m^2	BM-7 Note(2)
Luminance of white (Center point)		L_w	B/L on	15%	TBD	15%	-	CA-210
Luminance uniformity		U_W	θ = 0. Normal viewing angle B/L On Note(1)	80	-	-	%	BM-7 Note(3)
Response Time		Tr + Tf		-	35	-	ms	BM-5AS Note(4)
Color Chromaticity (CIE 1931)	White	W_X		0.277	0.292	0.307	-	CA-210 Note(5)
		W_X		0.318	0.333	0.348		
	Red	R_X		0.650	0.665	0.680		
		R_Y		0.308	0.323	0.338		
	Green	G_X		0.257	0.272	0.287		
		G_y		0.573	0.588	0.603		
	Blue	B_X		0.119	0.134	0.149		
		B_Y		0.106	0.121	0.136		
Viewing Angle	Hor.	θ_T	C/R≥10	80	85	-	Deg	EZ Contrast Note(6)
		θ_B		80	85	-		
	Ver.	θ_L		80	85	-		
		θ_R		80	85	-		
Optima View Direction			ALL					Note(7)

* This condition will be changed by the evaluation circumstance. If product is exposed to high temperatures for extended time, there is a possibility of the polarizer film damage which could degrade the optical characteristics.

Notes:

(1) Test Equipment Setup: After stabilizing and leaving the panel alone at a given temperature for 30min, the measurement should be executed. Measurement should be executed in a stable, windless, and dark room 30min after lighting the back-light. This should be measured in the center of screen.

The copyright belongs to APROSO Any unauthorized use is prohibited.

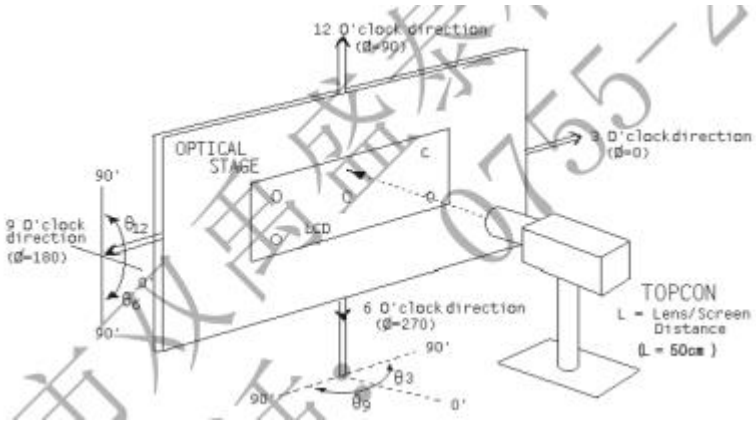

(2) Definition of Contrast Ratio (CR):

$$\text{Contrast Ratio (CR)} = \frac{\text{Luminance measured when LCD on the “white” state}}{\text{Luminance measured when LCD on the “black” state}}$$

(3) Definition of Luminance Uniformity: Active area is divided into 9 measuring areas (Shown in below), every measuring point is placed at the center of each measuring area.

$$\text{Luminance Uniformity} = \frac{\text{Min Luminance of white among 9-points}}{\text{Max Luminance of white among 9-points}} \times 100\%$$

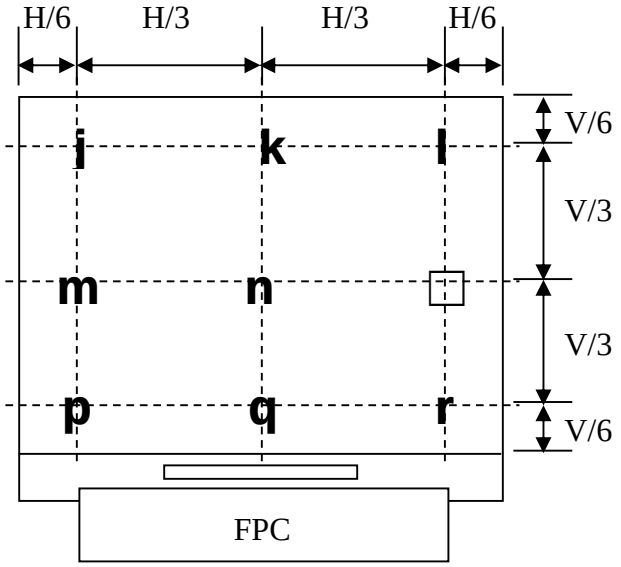

The spot locations for luminance measurement

(4) Definition of Response time:

The output signals of photo detector are measured when the input signals are Changed from “black” to “white” (rising time) and from time “white” to “black” (falling time), Respectively.

The copyright belongs to APROSO Any unauthorized use is prohibited.

The response time is defined as the time interval between the 10% and 90% of Amplitudes. Refer to figure as below.

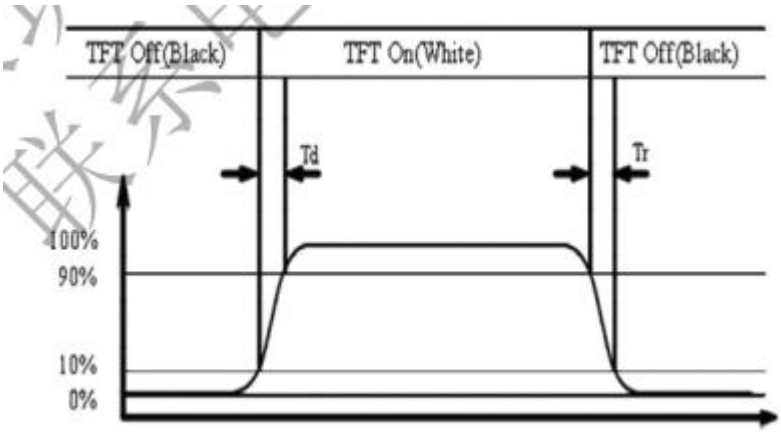

(5) Definition of viewing angle , 0 . Refer to figure as below

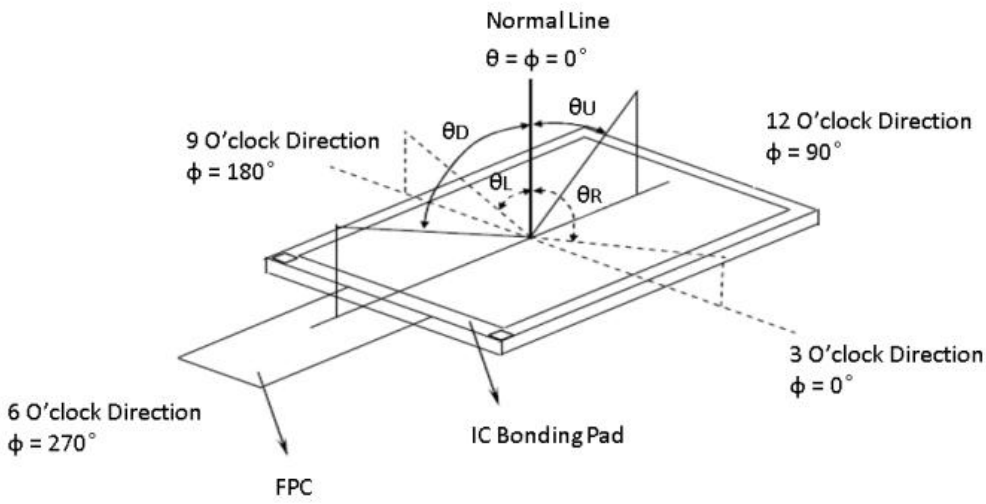

(6) Definition of Color Chromaticity (CIE 1931)
Color coordinate of white & red, green, blue at center point.

(7) The different Rubbing Direction will cause the different optima view direction.

The copyright belongs to APROSO Any unauthorized use is prohibited.

由 Autodesk 教育版产品制作

Pad No.	Pad Name
1	MIPI_TDN0
2	MIPI_TDP0
3	GND
4	MIPI_TDN1
5	MIPI_TDP1
6	GND
7	MIPI_TDN2
8	MIPI_TDP2
9	GND
10	MIPI_TCN
11	MIPI_TCP
12	GND
13	MIPI_TDN3
14	MIPI_TDP3
15	GND
16	VIO1.8V
17	NC
18	RST
19	LCD_ID 0V
20	LPTE
21	VDD 2.8V
22	GND
23	GND
24	GND
25	TP-RST1.8V
26	GND
27	TP_VCC2.8V
28	TP-EINT1.8V
29	TP-SCL1.8V
30	TP-SDA1.8V
31	GND
32	LEDA
33	LEDK

侧视图

背视图

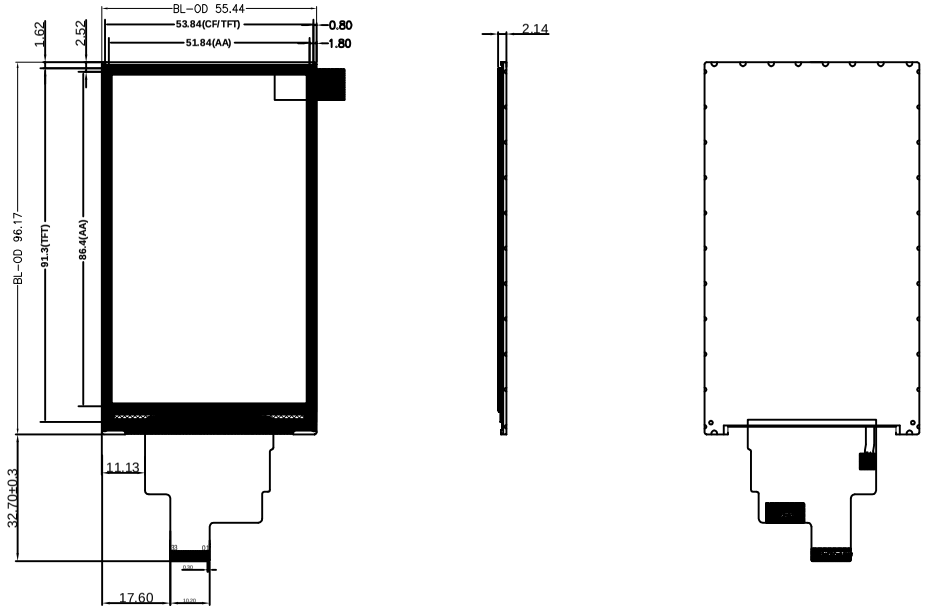

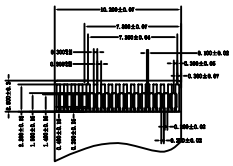

'B' Scale:4:1

屏(FPC排线）图

技术要求:

1、尺寸分辨率:3.97寸（480*800），全视角；
2、IC型号:_____；需回复厂家与详细型号
3、FPC要求:FPC采用化金工艺,Ni厚度：3-5um,Au厚度；至少0.03um；
耐温性能:在温度350度保持30秒时FPC不会起泡、变形、碳化；
长期湿热要求:45度，湿度95%，14天；
4、亮度:_____（min）,_____(TYP)；需回复详细参数
5、均匀性:≥80%；
6、LCD单体静电要求:空气±8KV,接触：±4KV；
7、工作温湿度范围:-20°C~+70°C,45%~85%RH；
储存温湿度范围:-30°C~+80°C，45%~95%RH；
8、带“*”为重点尺寸；
9、ROHS Compliant；

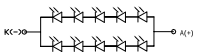

LED CIRCUIT DIAGRAM

11.6V-12.6V 40mA

变更日期	变更者	变更内容	标记
00000000	×××	××××××××××××××××	③
00000000	×××	××××××××××××××××	②
00000000	×××	××××××××××××××××	①

品名	A10E-3.97寸(MIPI)-屏(WVGA)-工程图纸-V1.0					版本序例号	V1.0	纸张大小	A2
作成	HKH	日期		单位	mm			备注:	
审核	×××	日期	00000000	材质	××				
批准	×××	日期	00000000	比例	1:1			图纸数量	1

由 Autodesk 教育版产品制作
由 Autodesk 教育版产品制作
由 Autodesk 教育版产品制作
由 Autodesk 教育版产品制作

由 Autodesk 教育版产品制作

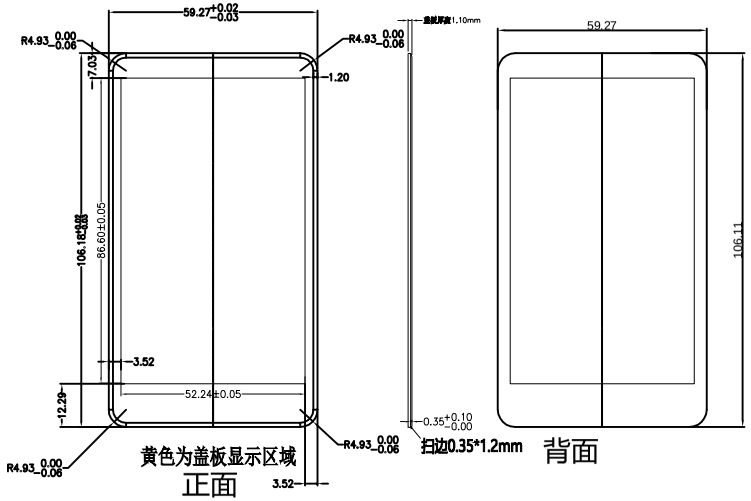

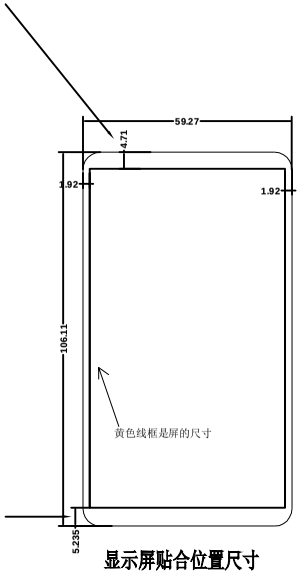

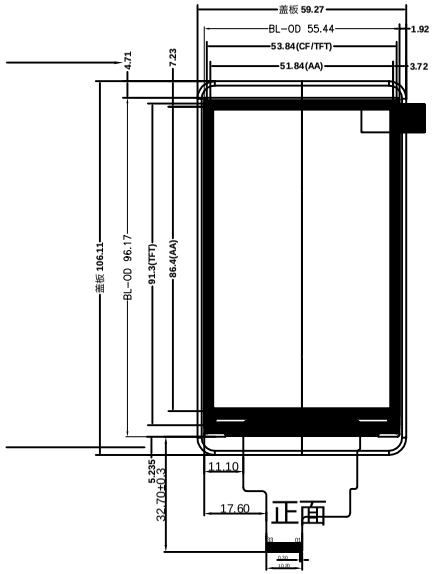

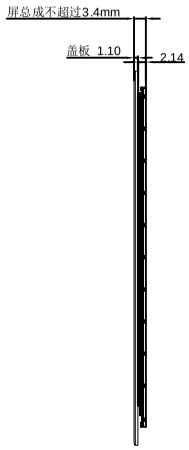

玻璃盖板

1、玻璃盖板的透光度必须达到95%以上
2、颜色为黑色
3、最好做一体黑效果。

屏总成图纸

技术要求:

1、尺寸分辨率:3.97寸（480*800），全视角；
2、IC型号:_____；需回复厂家与详细型号
3、FPC要求:FPC采用化金工艺,Ni厚度：3-5um,Au厚度；至少0.03um；
耐温性能:在温度350度保持30秒时FPC不会起泡、变形、碳化；
长期湿热要求:45度，湿度95%，14天；
4、亮度:_____（min）,_____(TYP)；需回复详细参数
5、均匀性:≥80%；
6、LCD单体静电要求:空气±8KV,接触：±4KV；
7、工作温湿度范围:-20° C~+70° C,45%~85%RH；
储存温湿度范围:-30° C~+80° C，45%~95%RH；
8、带“*”为重点尺寸；
9、ROHS Compliant；

标记	变更内容	变更者	变更日期
③	×××××××××××××××××	×××	00000000
②	×××××××××××××××××	×××	00000000
①	×××××××××××××××××	×××	00000000

品名	A10E -3.97寸(MIPI)-TP-工程图纸-V1.0					版本序例号	V1.0	纸张大小	A2
作成	HKH	日期	20241112	单位	mm			备注:	
审核	×××	日期	00000000	材质	××				
批准	×××	日期	00000000	比例	1:1			图纸数量	1

由 Autodesk 教育版产品制作
由 Autodesk 教育版产品制作
由 Autodesk 教育版产品制作
由 Autodesk 教育版产品制作

6.MODULE INTERFACE DESCRIPTION

Pin No.	Symbol	Description
1	D0-	MIPI DSI differential data pair
2	D0+	MIPI DSI differential data pair
3	GND	Power Ground
4	D1-	MIPI DSI differential data pair
5	D1+	MIPI DSI differential data pair
6	GND	Power Ground
7	D2-	MIPI DSI differential data pair
8	D2+	MIPI DSI differential data pair
9	GND	Power Ground
10	CLK-	MIPI DSI differential clock pair
11	CLK+	MIPI DSI differential clock pair
12	GND	Power Ground
13	D3-	MIPI DSI differential data pair
14	D3+	MIPI DSI differential data pair
15	GND	Power Ground
16	IOVCC	Power supply 1.8V~3.3V
17	NC	NC
18	RST_LCD	Reset input pin
19	ID	ID=0
20	TE	Mainly plays the role of data synchronization
21	VCC	Power supply 2.8-3.3V
22-24	GND	Power Ground
25	TP-RST	TP-RST
26	GND	Power Ground
27	TP-VCC	TP-VCC
28	TP-INT	TP-INT

The copyright belongs to APROSO Any unauthorized use is prohibited.

29	TP-SCL	TP-SCL
30	TP-SDA	TP-SDA
31	GND	Power Ground
32	LEDA	Back-light Anode
33	LEDK	Back-light Cathode

7.REFERENCE APPLICATION CIRCUIT

Please consult our technical department for detail information.

8. DSI system interface

The copyright belongs to APROSO Any unauthorized use is prohibited.

3.9 Power Block Diagram

The following is the power supply generation scheme, AXS1560A consists of VSP, VSN and IOVCC as the input power supply, and other power supply levels are generated in the chip.

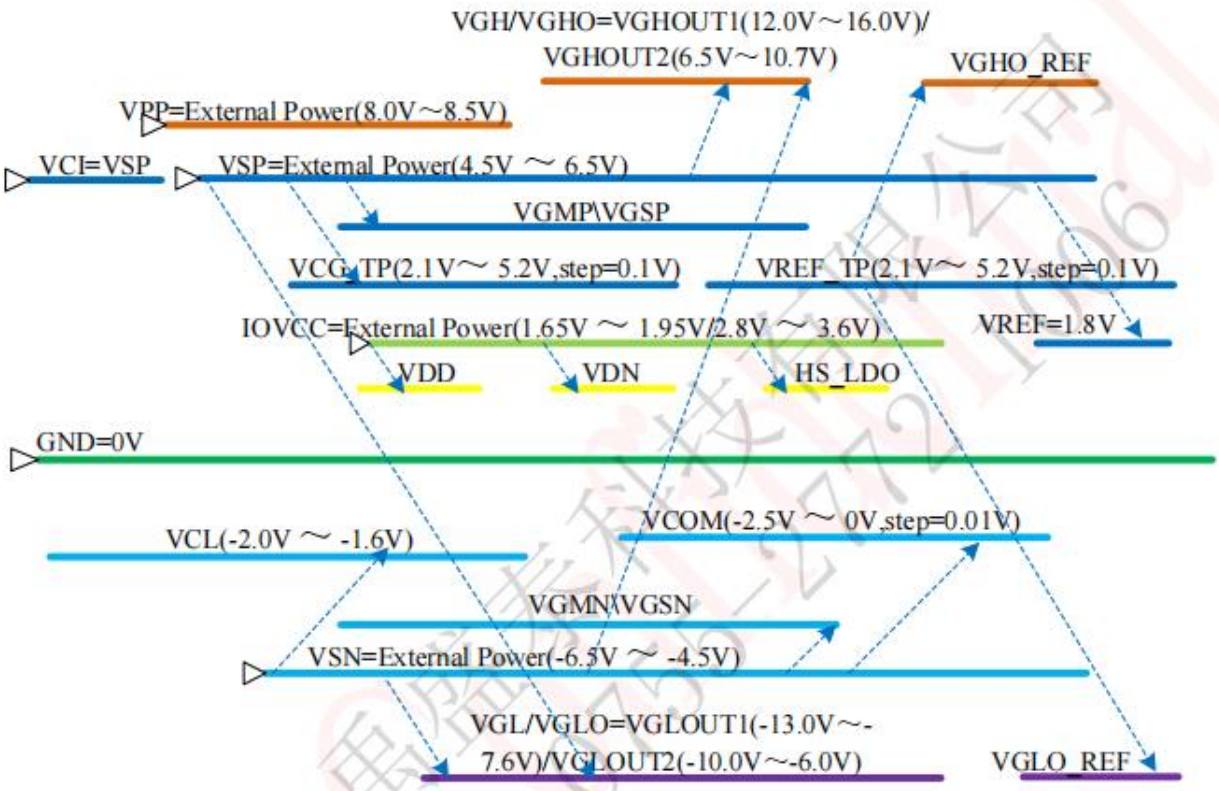

Note：

1.VDD include：VDD VDD_TP VDD_HS VDD_OSC

2.VDDI include：VDDI VDDI_DRV VDDI_FLH VDDI_HS VDDI_REF VDDI_TP VDDI_PS

3.VSS_HS=VSS_OSC=VSSA=VSSA_REF=VSSD=GND=0V

The copyright belongs to APROSO Any unauthorized use is prohibited.

9.RELIABILITY TEST CONDITIONS

No.	Test Item	Test Condition	Notes
1	High Temperature Storage	+80°C / 240H	Inspection after 2~4h storage at room temperature, the sample shall be free from defects: 1. Air bubble in the LCD; 2. Seal leak; 3. Non-display; 4. Missing segments; 5.Glass crack; 6. The surface shall be free from damage. 7. The electrical characteristics requirements shall be satisfied.
2	Low Temperature Storage	-30°C / 240H	
3	High Temperature Operating	+70°C / 240H	
4	Low Temperature Operating	-20°C / 240H	
5	Temperature Cycle	Ta=-10°C~+25~+50°C,10 Cycle,per30min	
6	High Temperature /Humidity storage	60°C ,90%RH / 240H	
7	ESD test	Open Cell , Air mode , + 2 KV	

Remarks:

(1) The test samples should be applied to only one test item.

(2) Sample size for each test item is 5~10pcs.

(3) For High Temperature/Humidity storage test, pure water (resistance>10MΩ) should be used.

(4) In case of malfunction defect caused by ESD damage, if it would be recovered to normal state after resetting, it would be judge as a good part.

(5) Failure judgment criterion: basic specification, electrical characteristic, mechanical characteristic, optical characteristic.

10.PACKING SPECIFICATION

TBD

The copyright belongs to APROSO Any unauthorized use is prohibited.

11.INSPECTION CRITERION

Inspection item			Judgement standard			
			Category		Acceptable number	
					A zone	B zone
1	Black spot, White spot, Bright Spot, Pinhole Foreign Particle, Bubble and Particle Between polarizer and glass, scratch on polarizer	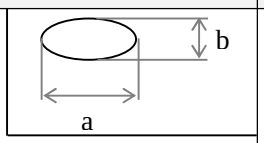 Φ=(a+b)/2(mm)	A B C	Φ≦0.10 0.10<Φ≦0.20 Φ>0.2	Ignored 2 0	Ignored
			Total defective point(B,C)		3	
	Pixel point defect	Bright spot		0.15<Φ≦0.20	N≤2	Ignored
		Dark spot/ Black spot		0.15<Φ≦0.20	N≤2	
		Attached to the two pixels are bright spots		0.15<Φ≦0.20	N≤2	
		Even a two pixel is dark		0.15<Φ≦0.20	N≤2	
		Pixel total number		0.15<Φ≦0.20	N≤2	
		Note1: the spot defect caused by foreign matter is judged according to the defect of the foreign body. Note 2: when the light is not wired to show the type of defects.				
2	Black line, White line, Bubble and Particle Between Polarizer and glass, Scratch on polarizer	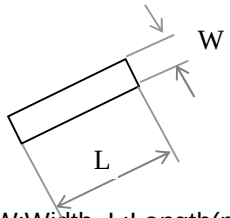 W:Width, L:Length(mm)	A B C	W≦0.03 L≦3.0 0.03<W≦0.05 L≦3.0 0.05<W	Ignored 2 0	Ignored
			Total defective point(B,C)		2	
3	Contrast variation	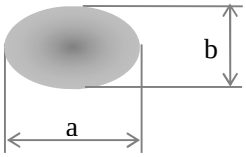 Φ=(a+b)/2(mm)	A B C	Φ≦0.1 0.1<Φ≦0.3 Φ>0.3	Ignored 2 0	Ignored
			Total defective point(B,C)		2	
4	Bubble inside cell		any size		none	none
5	Polarizer defect (if Polarizer is used)	Scratch and damage on polarizer, particle on polarizer or between polarizer and glass.	Refer to item 1 and item 2.			
		Bubble, dent and convex	A B C	Φ≦0.3 0.3<Φ≦0.5 0.5<Φ	Ignored 2 0	Ignored
			Total defective point(B,C)		2	

The copyright belongs to APROSO Any unauthorized use is prohibited.

Inspection item		Judgement standard		
		Category	Acceptable number	
			A zone	B zone
6	Surplus glass	①Stage surplus glass 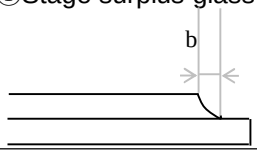	b≦0.3mm	
		②Surrounding surplus glass 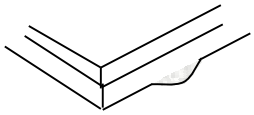	Should not influence outline dimension and assembling.	
7	MURA	①MURA	Naked eye examination: red, green, blue screen does not allow the appearance, black screen requires visual is not obvious, the specific reference limit samples. Note: the principle of closing the sample is to be installed on the whole machine and the end user will not find it in the normal usage scenario. Inspection basis: 6%ND (MURA mainly in the black screen and indoor light is relatively dark will be found, it is recommended to turn off the indoor lighting inspection.)	
		②Point Black / White / point(MURA)	1, under the black / gray screen check: D≦0.10mm Ignored; 0.10mm<D≦0.3mm,N≦2; D>0.3mm: Unqualified。 2, switch to the red, green, blue in which any one of the screen appears black or white or point to point white or point of failure. 	

The copyright belongs to APROSO Any unauthorized use is prohibited.

Inspection item			Judgment standard Category(application: B zone)	
8	Glass defect crack	①The front of lead terminals 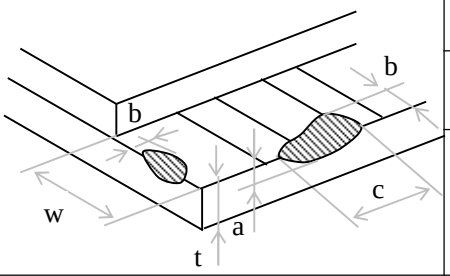 	A	If a≦t and b ≦1.0, c is not limited
			B	a≦t, 1≦b≦2mm, c≦3mm
			C	If glass crack cover alignment mark, b≦0.5mm.
			D	Crack at two sids of lead terminals should not cover patterns and alignment mark
		②Surrounding crack—non-contact side 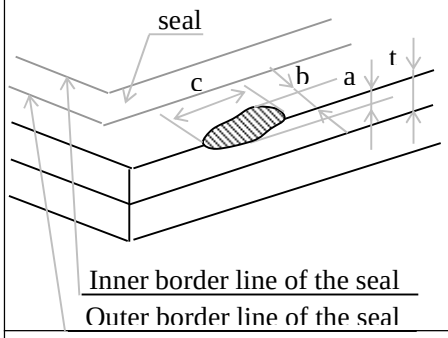 	b < Inner borderline of the seal	
		③ Surrounding crack— contact side 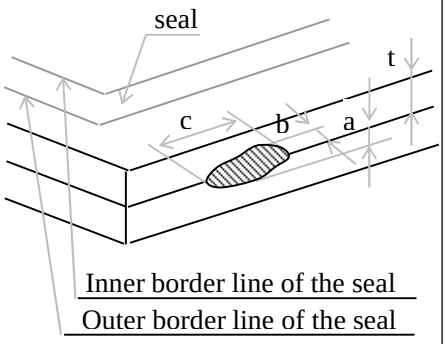 	b < Outer borderline of the seal	
		④Corner 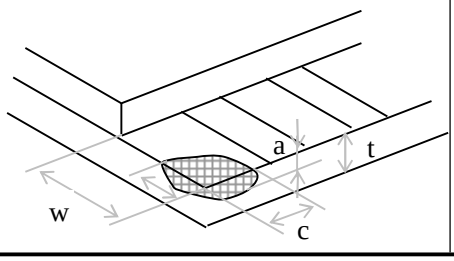 	A	a ≦ t, b ≦ 3.0, c ≦ 3.0
			*Glass crack should not cover patterns used for	

The copyright belongs to APROSO Any unauthorized use is prohibited.

Inspection item			Judgement standard
9	FPC defect	Component soldering: No cold soldering, short/open circuit, burr, tin ball. The flat encapsulation component position deviation must be less than 1/2 width of the pin (Pic.1)； The sheet component deviation: pin deviates from the pad and contact with the near components is not permitted（Pic.2）	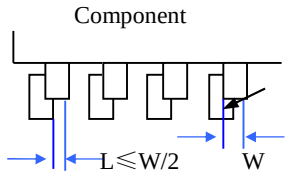
		lead defect: The lead lack must be less than 1/2of its width; The lead burr must be less than 1/2 of the seam; Impurities connect with the near leads is not permitted	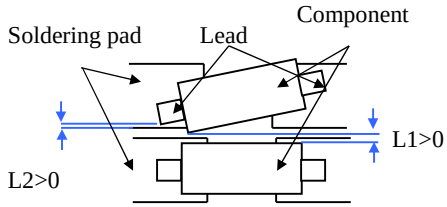
		Connector soldering: Soldering tin is at contact position of the plug and socket is not permitted No foundation is scald Serious cave distortion on plug and socket contact pin is not permitted	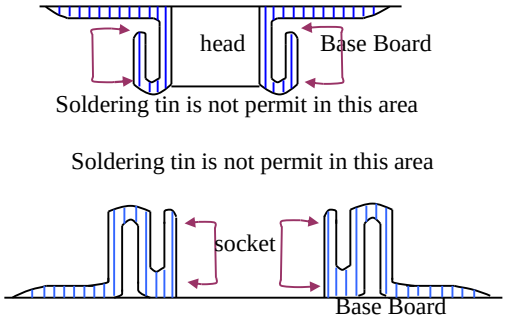

The copyright belongs to APROSO Any unauthorized use is prohibited.

12.GENERAL PRECAUTIONS

1.1 HANDING

(1) When the module is assembled, it should be attached to the system firmly. Be careful not to twist and bent the module.

(2) Refrain from strong mechanical shock and / or any force to the module. In addition to damage, this may cause improper operation or damage to the module and back-light unit.

(3) Note that display modules are very fragile and could be easily damaged. Do not press or scratch the surface harder than a HB pencil lead.

(4) Wipe off water droplets or oil immediately. If you leave the droplets for a long time, straining and discoloration may occur.

(5) If the display module surface becomes contaminated, breathe on the surface and gently wipe it with a soft dry cloth. If it is heavily contaminated, should be wiped by moisten cloth with isopropyl alcohol or ethyl alcohol solvents, DO NOT with water, ketone type materials (e.g. acetone), aromatic, toluene, ethyl acid or methyl chloride, and so on.

(6) If the liquid crystal material leaks from the panel, it should be kept away from the eyes or mouth. In case of contact with hands, legs or clothes, it must be washed away thoroughly with soap.

(7) Use finger-stalls with sort gloves in order to keep display clean during the incoming inspection and assembly process.

(8) Protection film for polarizer on the module shall be slowly peeled off just before use so that the electrostatic charge can be minimized.

(9) Do not touch directly conductive parts such as the CMOS LSI pad and the interface terminals with bare hands, therefore operations should be grounded whenever he/she comes into contact with the modules.

(10) Do not exceed the absolute maximum rating value. (The supply voltage variation, input voltage variation, variation in part contents and environmental temperature, and so on), otherwise the module may be damaged.

1.2 SOLDERING

(1) Use soldering irons with proper grounding and no leakage.

(2) For No RoHS Product: soldering temperature is 290~350°C, soldering time is 3~5s; for RoHS Product: soldering temperature is 340~370°C, soldering time is 3~5s.

(3) If soldering flux is used, be sure to remove any remaining flux after soldering (This does not apply in the case of a non-halogen type of flux).

1.3 STORAGE

(1) DO NOT leave the module in high temperature and high humidity for a long times, keep the temperature from 0°C to 35°C and relative humidity of less than 60%.

(2) It is highly recommended to store the module in a dark place. The Liquid crystal is deteriorated by ultraviolet, DO NOT leave it in direct sunlight and strong ultraviolet ray for many hours.

The copyright belongs to APROSO Any unauthorized use is prohibited.